STAMINA®

MINI STEPPER

Owner's Manual

⚠ WARNING

Exercise can present a health risk. Consult a physician before beginning any exercise program with this equipment. If you feel faint or dizzy, immediately discontinue use of this equipment. Serious bodily injury can occur if this equipment is not assembled and used correctly. Serious bodily injury can also occur if all instructions are not followed. Keep others and pets away from equipment when in use. Always make sure all bolts and nuts are securely tightened prior to each use. Follow all safety instructions in this manual.

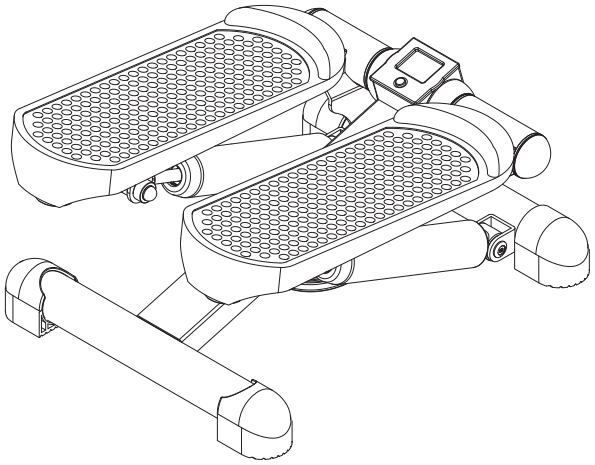

Product May Vary Slightly From Pictured.

When calling for parts or service, please specify the following numbers:

Model#: 40-0041B

S/N: _____

CAUTION:
Weight on this product should not exceed 250 lbs.

This Product is Distributed Exclusively by

STAMINA®

2040 N Alliance Ave, Springfield, MO 65803
Customer Care
1 (800) 375-7520
www.staminaproducts.com

STAMINA PRODUCTS
MADE IN CHINA

© 2020 Stamina Products, Inc.
2020, 08

STAMINA®

ACCESS YOUR ONLINE WORKOUT VIDEOS!

How to Access Your Videos

1. Go to video.staminaproducts.com
2. Click REDEEM A CODE
3. Enter your product VIDEO CODE

Your video code is the model number + serial number. This info can be found on the serial decal.

EXAMPLE ONLY.* ***USE MODEL NUMBER + SERIAL NUMBER FROM THE DECAL ON YOUR PRODUCT.*



Coupon Code*

15-033601JAN351450

REDEEM

Digital product only. No physical DVD will be shipped.

TABLE OF CONTENTS

Safety Instructions 3
Before You Begin 5
Equipment Warning, Caution & Notice Labels ... 6
Assembly Instructions 7
Set Up Instructions 8
Operational Instructions 9
Storage 10
Maintenance 10
Conditioning Guidelines 11
Warm-Up and Cool-Down 12
Warranty 13
Product Parts Drawing 14
Parts List 15
Notes 16
Fax/Mail Ordering Form 18

SAFETY INSTRUCTIONS

⚠ WARNING **Cancer and Reproductive Harm www.P65Warnings.ca.gov**

⚠ WARNING **Consult your physician before starting this or any exercise program. This is especially important if you are over the age of 35, have never exercised before, are pregnant, or suffer from any health problem. This product is for home use only. Do not use in institutional or commercial applications. Failure to follow all warnings and instructions could result in serious injury or death.**

⚠ WARNING **To reduce the risk of serious injury, read the following Safety Instructions before using the Stamina® Mini Stepper.**

1. Save these instructions and ensure that other exercisers read this manual prior to using the **Stamina® Mini Stepper** for the first time.
2. Read all warnings and cautions posted on the **Stamina® Mini Stepper.**
3. The **Stamina® Mini Stepper** should only be used after a thorough review of the Owner's Manual. Make sure that it is properly assembled and tightened before use.
4. Keep children away from the **Stamina® Mini Stepper.** Do not allow children to use or play on the **Stamina® Mini Stepper.** Keep children and pets away from the **Stamina® Mini Stepper** when it is in use.
5. Always make sure that the Cable(4) is properly seated in the groove on the Pulley(5) before using the **Stamina® Mini Stepper.**
6. It is recommended that you place this exercise equipment on an equipment mat.
7. Set up and operate the **Stamina® Mini Stepper** on a solid level surface. Do not position the **Stamina® Mini Stepper** on loose rugs or uneven surfaces.
8. Make sure that adequate space is available for access to and around the **Stamina® Mini Stepper.**
9. Before using, inspect the **Stamina® Mini Stepper** for worn or loose components, and securely tighten or replace any worn or loose components prior to use.
10. Shocks on steppers get HOT during use. To avoid burns, do not touch the shocks until they have time to cool.
11. Consult a physician prior to commencing an exercise program and follow his/her recommendations in developing your fitness program. If at any time during exercise you feel faint, dizzy, or experience pain, stop and consult your physician.
12. Always choose the workout which best fits your physical strength and flexibility level. Know your limits and train within them. Always use common sense when exercising.
13. Do not wear loose or dangling clothing while using the **Stamina® Mini Stepper.**
14. Never exercise in bare feet or socks; always wear proper footwear such as running, walking, or cross training shoes that fit well, provide foot support, and feature non-skid rubber soles.
15. Be careful to maintain your balance while using, mounting, dismounting, or assembling the **Stamina® Mini Stepper,** loss of balance may result in a fall and serious bodily injury.
16. The **Stamina® Mini Stepper** should not be used by persons weighing over 250 pounds.
17. The **Stamina® Mini Stepper** should be used by only one person at a time.
18. The **Stamina® Mini Stepper** is for consumer use only. It is not for use in public or semipublic facilities.

EXTEND YOUR PARTS WARRANTY TO 180 DAYS FROM THE DATE OF PURCHASE. REGISTER YOUR PRODUCT.

STAMINA®

NEED HELP? CONTACT US FIRST

1 (800) 375-7520

customer.care@staminaproducts.com

Hi! From all of us here at Stamina Products, thank you for your purchase. We know that you have big fitness goals in mind and we are here to help you along. Call us, email us, or send us a message on Facebook. Be sure to contact us if you have any questions on your new product. We look forward to hearing from you!

With your body in mind,
Stamina Customer Care

To enact your extended warranty and to help us better serve you, please **go online** and register your new product.

register.staminaproducts.com

It is quick and easy to register online, but if you're a little old school or just need a reason to raise that little flag on your mailbox, fill out the info on the last page of this manual and mail it in.



ONLINE
customer.care@staminaproducts.com
www.staminaproducts.com



TELEPHONE
1 (800) 375-7520



FAX
(417) 889-8064



MAIL
Stamina Products, Inc.
ATTN: Customer Care
2040 N Alliance Ave
Springfield, MO 65803



facebook.com/StaminaProducts
facebook.com/AeroPilates

CUSTOMER CARE HOURS:
Monday-Thursday, 7:30 AM-5:00 PM, Central Time
Friday, 8:00 AM-3:00 PM, Central Time

BEFORE YOU BEGIN

Thank you for choosing the **Stamina® Mini Stepper.** We take great pride in this quality product and hope it will provide many hours of quality exercise to make you feel better, look better, and enjoy life to its fullest.

It's a proven fact that a regular exercise program can improve your physical and mental health. Too often, our busy lifestyles limit our time and opportunity to exercise. The **Stamina® Mini Stepper** provides a convenient and simple method to begin your journey of getting your body in shape and achieving a happier and healthier lifestyle.

Before reading further, please review the drawing below and familiarize yourself with the parts that are labeled. Locate the serial decal on the product and write the serial number on the cover of the manual in the space provided. See page 6 for an image of the serial decal. Model number and serial number are required when calling for assistance.

Read this manual carefully before using the **Stamina® Mini Stepper.**

Providing you with a quality product is Stamina's top priority. However, sometimes there could be a missing or incorrectly sized part. If you have any questions or problems with the parts included with your **Stamina® Mini Stepper,** please do not return the product. Contact us FIRST!

If a part is missing or defective, please contact Customer Care for assistance. Call us toll free at 1-800-375-7520 (in the U.S.) or live chat on staminaproducts.com. Our Customer Care Staff is available to assist you from 7:30 A.M. to 5:00 P.M. (Central Time) Monday through Thursday and 8:00 A.M. to 3:00 P.M. (Central Time) on Friday.

Be sure to have the name and model number of the product available when you contact us.

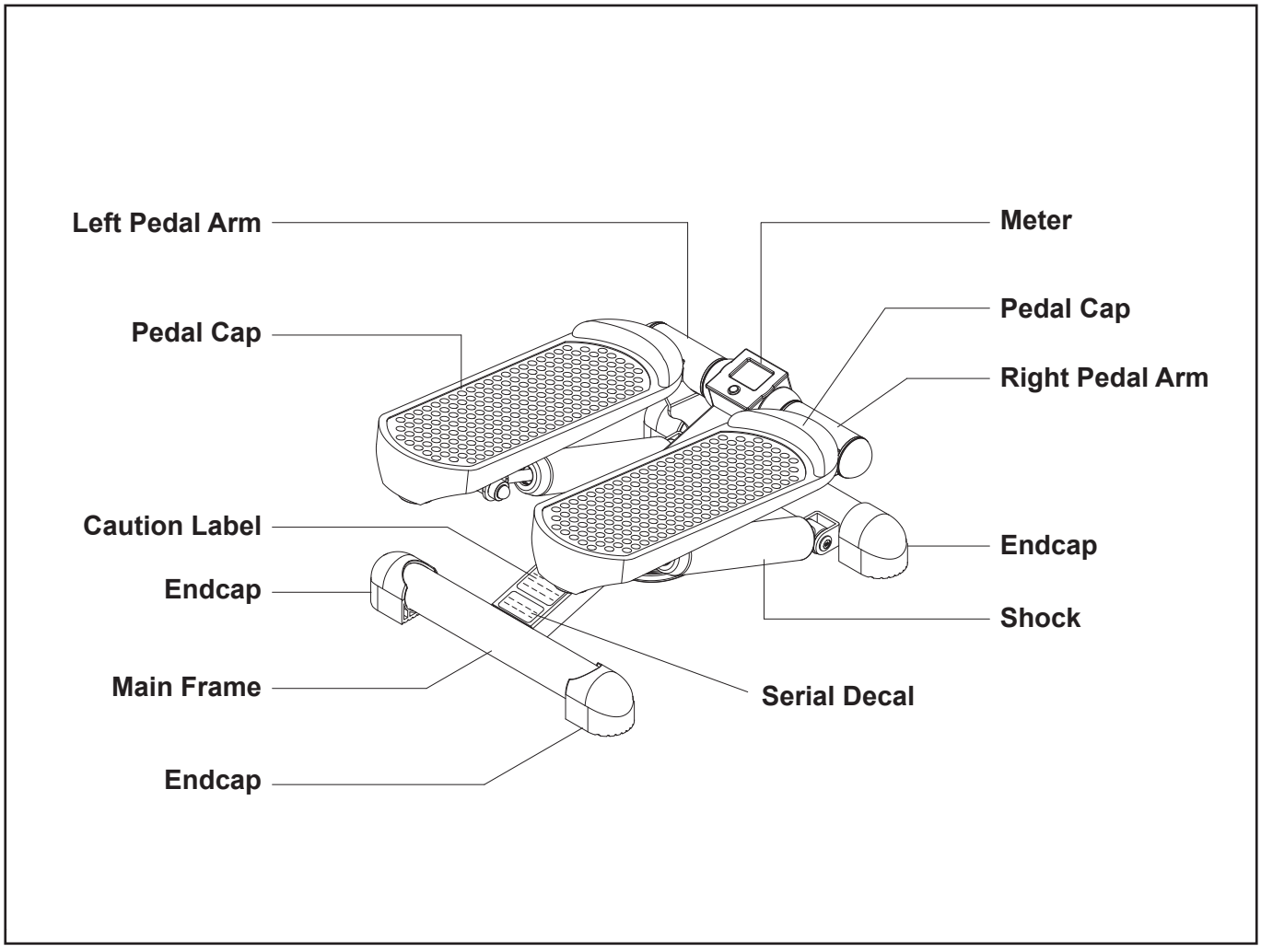

EQUIPMENT WARNING, CAUTION & NOTICE LABELS

This chart is provided to help identify the warning, caution, and notice labels on the **Stamina® Mini Stepper.** Please take a moment to familiarize yourself with all of the warning, caution, and notice labels.

CAUTION LABEL(28)

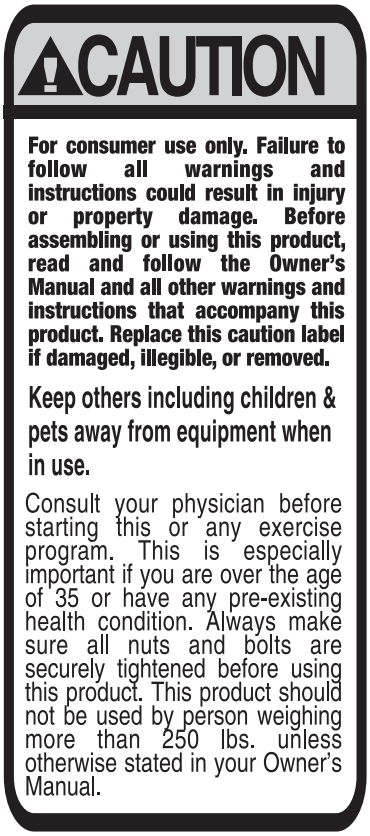

SHOCK CAUTION(27)



PINCH POINT DECAL(30)



SERIAL DECAL(29)



To best serve you, our Customer Care Representatives will need your serial number. For quick access, write in your serial number on the cover of the manual.

ASSEMBLY INSTRUCTIONS

Place all parts from the box in a cleared area and position them on the floor in front of you. Remove all packing materials from your area and place them back into the box. Do not dispose of the packing materials until assembly is completed. Read each step carefully before beginning. If you are missing a part, please go to staminaproducts.com under the Customer Care section and order the part needed, e-mail us at customer.care@staminaproducts.com, or call us toll free at 1-800-375-7520 (in the U.S.). Our Customer Care Staff is available to assist you from 7:30 A.M. to 5:00 P.M. (Central Time) Monday through Thursday and 8:00 A.M. to 3:00 P.M. (Central Time) on Friday.

Some product parts are fit tested at the factory to ensure proper fit and alignment. Marks in the paint may be noticeable, but are not an indication of damage.

STEP 1

Refer to detail view A. The **PULLEY BRACKET(3)** is tied to the **MAIN FRAME(1)** with a nylon strap for packing. Use scissors to carefully cut and remove the nylon strap.

STEP 2

Refer to the illustration below. Lift the **RIGHT PEDAL ARM(10)** up as shown. Place the **CABLE(4)** in the groove on the **PULLEY(5)** properly, then press the **RIGHT PEDAL ARM(10)** down.

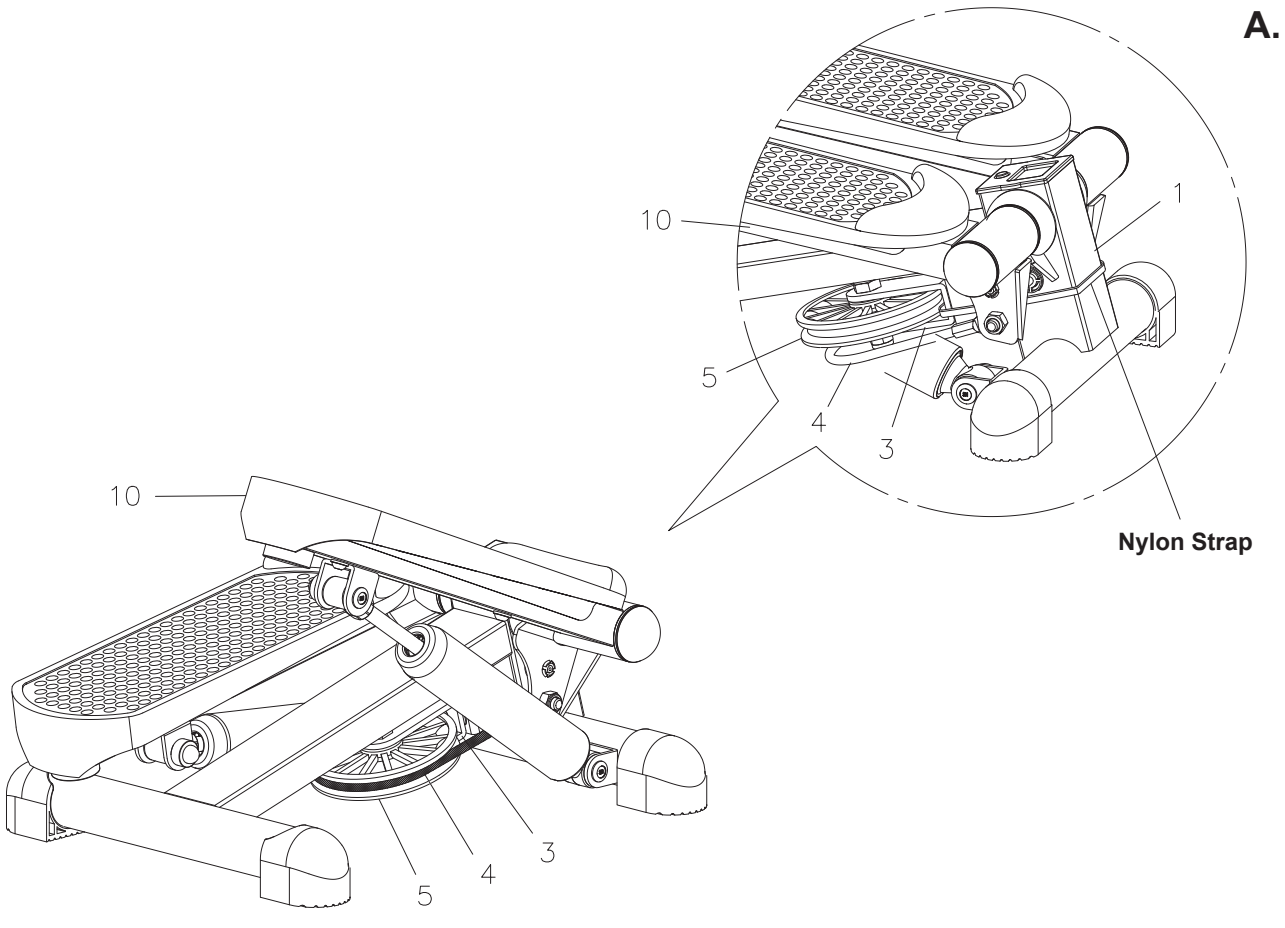

SET UP INSTRUCTIONS

Place the **Stamina® Mini Stepper** in the area where it will be used. It is recommended that the **Stamina® Mini Stepper** be placed on an equipment mat. The maximum operation dimensions of the **Stamina® Mini Stepper** is approximately 15.3 inches long x 12 inches wide x 12 inches tall. (These dimensions may vary up to one inch.) Make sure that adequate space is available for access to passage around and emergency dismount from the **Stamina® Mini Stepper.** A minimum of 20 inches on both sides and 20 inches either behind or in front of the **Stamina® Mini Stepper** is required for safe operation.

LEVELING: Adjust the location of **Stamina® Mini Stepper** so the stepper sits on the floor without rocking.

MOVING: The **Stamina® Mini Stepper** must be lifted to be moved. Grasp the Front and Rear Stabilizers to move the **Stamina® Mini Stepper.** Do not use the **PEDAL ARMS(10, 14)** to move the **Stamina® Mini Stepper.** The **PEDAL ARMS(10, 14)** will move and the **SHOCK(26)** may pinch your hand or fingers.

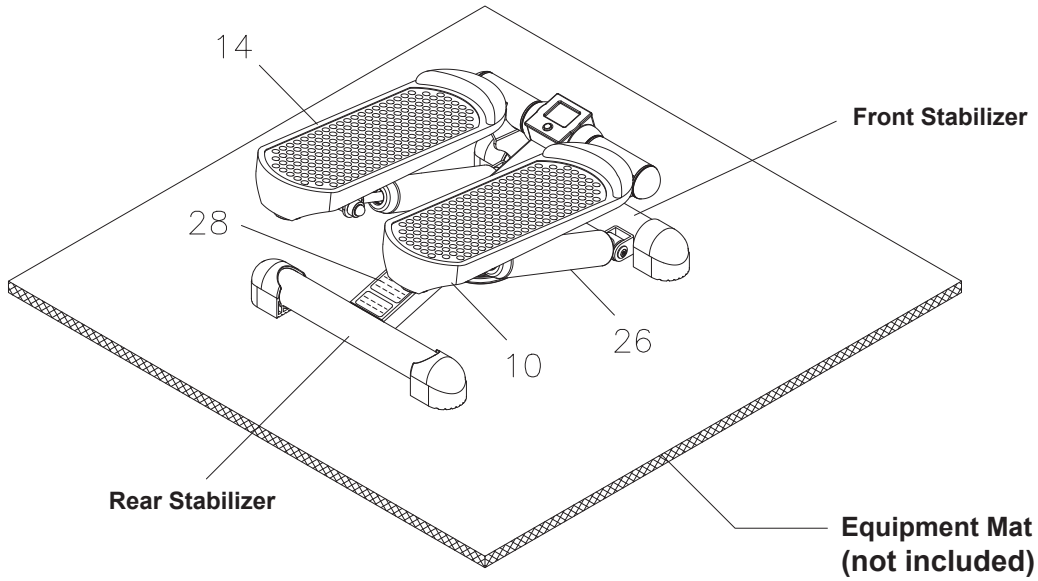

FUNCTION INSPECTION:

NOTE: Always make sure that the **CABLE(4)** is properly seated in the groove on the **PULLEY(5)** before using the **Stamina® Mini Stepper.**

Visually inspect the **Stamina® Mini Stepper** to verify that assembly is as shown in the above illustration. Check the function of the **Stamina® Mini Stepper.** Stand on the foot pedals and slowly move your highest foot downward and follow the natural path of the machine. The **SHOCKS(26)** should provide resistance for your workout.

CAUTION: Locate and read the **CAUTION LABEL(28)** on the **Stamina® Mini Stepper.** Make sure that all users read the **CAUTION LABEL(28)** before using the product.

OPERATIONAL INSTRUCTIONS

USING THE FITNESS MONITOR

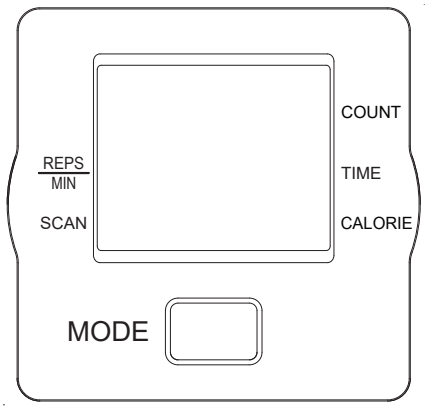

POWER ON: Pedal movement or press the button.

POWER OFF: After four minutes of inactivity, the monitor automatically shuts off. Function values are not saved.

FUNCTION BUTTON:
Press and release to select the function of the lower readout.
Press and hold for three seconds to reset all functions to zero.

FUNCTIONS:

COUNT: Upper readout displays the total number of strides you have taken from zero to 9999 strides.

SCAN: Automatically scans each function of **REPS/MIN, TIME,** and **CALORIE** in sequence with change every six seconds. Press and release the button until the arrow appears on the display and points to the **SCAN.**

REPS/MIN: Displays the rate of strides per minute.

TIME: Displays the stepping time from one second up to 99:59 minutes. After six seconds of inactivity, the meter will automatically stop timing the workout. Restart the workout time by moving the pedals.

CALORIE: Displays the calorie burned from zero to 9999 Kcal.
The calorie readout is an estimate for an average user. It should be used only as a comparison between workouts on this unit.

BATTERY
The monitor operates with a 1.5v LR44 button cell battery. Replace the battery when you see inconsistencies in the display.

HOW TO INSTALL AND REPLACE BATTERY:

1. Remove the MONITOR(7) from the **Stamina® Mini Stepper.** Unplug the SENSOR WIRE(24). Place the MONITOR(7) up-side down as shown in the illustration.
2. Refer to the illustration. Slide out the old battery.
3. Install a new button cell battery. Assembly the MONITOR(7) back to the **Stamina® Mini Stepper.**

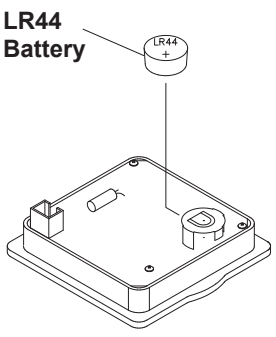

NOTE: 1. Ultimate disposal of battery should be handled according to all state and federal laws and regulations.
2. Do not dispose of batteries in fire.

STORAGE

1. To store the **Stamina® Mini Stepper,** simply keep it in a clean dry place.
2. The minimum dimensions of the **Stamina® Mini Stepper** are approximately 15.3 inches long x 12 inches wide x 6.6 inches tall. These dimensions will vary. Please measure your **Stamina® Mini Stepper** if exact dimensions are needed.
3. Grasp the Front and Rear Stabilizers to move the **Stamina® Mini Stepper.** Do not use the **PEDAL ARMS(10, 14)** to move the **Stamina® Mini Stepper.**

MAINTENANCE

The safety and integrity designed into the **Stamina® Mini Stepper** can only be maintained when the **Stamina® Mini Stepper** is regularly examined for damage and wear. Special attention should be given to the following:

1. Verify that the **SHOCKS(26)** provide resistance by pushing down on the foot pedals.
2. **SHOCKS(26)** on steppers get **HOT** during use. To avoid burns, do not touch the **SHOCKS(26)** until they have time to cool.
3. Verify that the **CAUTION LABEL(28)** is in place and easy to read. Call Stamina Products immediately (1-800-375-7520) for a replacement Warning Label if the **CAUTION LABEL(28)** is missing or damaged.
4. It is the sole responsibility of the user/owner to ensure that regular maintenance is performed.
5. Worn or damaged components must be replaced immediately or the **Stamina® Mini Stepper** removed from service until repair is made.
6. Only Stamina Products supplied components should be used to maintain/repair the **Stamina® Mini Stepper.**
7. Keep your **Stamina® Mini Stepper** clean by wiping it off with an absorbent cloth after use.

CONDITIONING GUIDELINES

How you begin your exercise program depends on your physical condition. If you have been inactive for several years or are severely overweight, start slowly and increase your workout time gradually. Increase your workout intensity gradually by monitoring your heart rate while you exercise.

Remember to follow these essentials:

- Have your doctor review your training and diet programs.
- Begin your training program slowly with realistic goals that have been set by you and your physician.
- Warm up before you exercise and cool down after you work out.
- Take your pulse periodically during your workout and strive to stay within a range of 60% (lower intensity) to 90% (higher intensity) of your maximum heart rate zone. Start at the lower intensity, and build up to higher intensity as you become more aerobically fit.
- If you feel dizzy or lightheaded you should slow down or stop exercising.

Initially you may only be able to exercise within your target zone for a few minutes; however, your aerobic capacity will improve over the next six to eight weeks. It is important to pace yourself while you exercise so you don't tire too quickly.

To determine if you are working out at the correct intensity, use a heart rate monitor or use the table below. For effective aerobic exercise, your heart rate should be maintained at a level between 60% and 90% of your maximum heart rate. If just starting an exercise program, work out at the low end of your target heart rate zone. As your aerobic capacity improves, gradually increase the intensity of your workout by increasing your heart rate.

Measure your heart rate periodically during your workout by stopping the exercise but continuing to move your legs or walk around. Place two or three fingers on your wrist and take a six second heartbeat count. Multiply the results by ten to find your heart rate. For example, if your six second heartbeat count is 14, your heart rate is 140 beats per minute. A six second count is used because your heart rate will drop rapidly when you stop exercising. Adjust the intensity of your exercise until your heart rate is at the proper level.

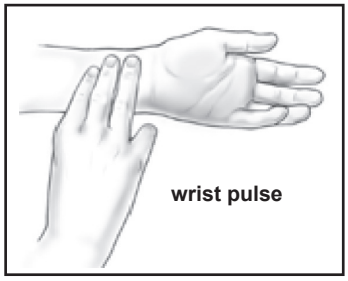

Target Heart Rate Zone Estimated by Age*

Age	Target Heart Rate Zone (55%-90% of Maximum Heart Rate)	Average Maximum Heart Rate 100%
20 years	110-180 beats per minute	200 beats per minute
25 years	107-175 beats per minute	195 beats per minute
30 years	105-171 beats per minute	190 beats per minute
35 years	102-166 beats per minute	185 beats per minute
40 years	99-162 beats per minute	180 beats per minute
45 years	97-157 beats per minute	175 beats per minute
50 years	94-153 beats per minute	170 beats per minute
55 years	91-148 beats per minute	165 beats per minute
60 years	88-144 beats per minute	160 beats per minute
65 years	85-139 beats per minute	155 beats per minute
70 years	83-135 beats per minute	150 beats per minute

* For cardiorespiratory training benefits, the American College of Sports Medicine recommends working out within a heart rate range of 55% to 90% of maximum heart rate. To predict the maximum heart rate, the following formula was used: 220 - Age = predicted maximum heart rate

WARM-UP and COOL-DOWN

Warm-Up The purpose of warming up is to prepare your body for exercise and to minimize injuries. Warm up for two to five minutes before strength training or aerobic exercising. Perform activities that raise your heart rate and warm the working muscles. Activities may include brisk walking, jogging, jumping jacks, jump rope, and running in place.

Stretching Stretching while your muscles are warm after a proper warm-up and again after your strength or aerobic training session is very important. Muscles stretch more easily at these times because of their elevated temperature, which greatly reduces the risk of injury. Stretches should be held for 15 to 30 seconds. Do not bounce.

Suggested Stretching Exercises

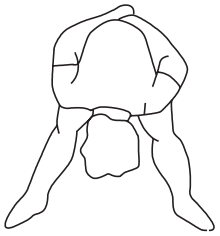

Lower Body Stretch
Place feet shoulder-width apart and lean forward. Keep this position for 30 seconds using the body as a natural weight to stretch the backs of the legs.
DO NOT BOUNCE!
When the pull on the back of the legs lessens, gradually try a lower position.

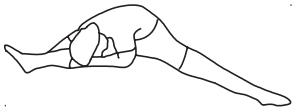



Floor Stretch
While sitting on the floor, open the legs as wide as possible. Stretch the upper body toward the knee on the right leg by using your arms to pull your chest to your thighs. Hold this stretch 10 to 30 seconds.
DO NOT BOUNCE!
Do this stretch 10 times. Repeat the stretch with the left leg.

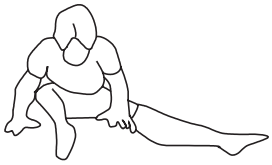

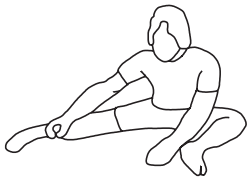

Bent Torso Pulls
While sitting on the floor, have legs apart, one leg straight and one knee bent. Pull the chest down to touch the thigh on the leg that is bent, and twist at the waist. Hold this position at least 10 seconds. Repeat 10 times on each side.



Bent Over Leg Stretch
Stand with feet shoulder-width apart and lean forward as illustrated. Using the arms, **gently** pull the upper body towards the right leg. Let the head hang down.
DO NOT BOUNCE!
Hold the position a minimum of 10 seconds. Repeat pulling the upper body to the left leg. Do this stretch several times slowly.

Remember to always check with your physician before starting any exercise program.

Cool-Down The purpose of cooling down is to return the body to its normal, or near normal, resting state at the end of each exercise session. A proper cool-down slowly lowers your heart rate and allows blood to return to the heart. Your cool-down should include the stretches listed above and should be completed after each strength training session.

LIMITED WARRANTY

MODEL 40-0041B

WARRANTY

Stamina Products, Inc. (“Stamina”) warrants to the original purchaser that this product will be free from defects in materials and workmanship that arise under normal use, service, proper assembly and proper operation in accordance with product warnings/instructions for a period of 90 days on the parts and one year on the frame from the date of the original purchase from an authorized retailer. **THIS WARRANTY SHALL NOT APPLY TO ANY PRODUCT WHICH HAS BEEN SUBJECT TO COMMERCIAL USE, ABUSE, MISUSE, ALTERATION OF ANY KIND OR TO ANY DEFECT OR CHANGE CAUSED BY IMPROPER ASSEMBLY, REPAIR, REPLACEMENT, SUBSTITUTION OR USE WITH PARTS NOT PROVIDED BY STAMINA.** Commercial use includes use of product in athletic clubs, health clubs, spas, gyms, and all other public or semipublic facilities whether or not the product’s use is in furtherance of a profit making enterprise, and all other use which is not for personal purposes.

To implement this limited warranty, send a written notice stating your name, date, and place of purchase and a brief description of the defect along with your receipt to Stamina Products, Inc. 2040 N Alliance Ave, Springfield, Missouri, USA, MO 65803, or email us at customer.care@staminaproducts.com, or call us at 1-800-375-7520. If the defect is covered under this limited warranty, you will be requested to return the product or part to us for free repair or replacement at our option.

NO ACTION FOR BREACH OF THIS LIMITED WARRANTY MAY BE COMMENCED MORE THAN ONE (1) YEAR AFTER THE DATE THE ALLEGED BREACH WAS OR SHOULD HAVE BEEN DISCOVERED. NO ACTION FOR BREACH OF ANY IMPLIED WARRANTY (INCLUDING MERCHANTABILITY AND FITNESS FOR A PARTICULAR PURPOSE) MAY BE COMMENCED MORE THAN ONE (1) YEAR AFTER DELIVERY OF THE PRODUCT TO THE PURCHASER. These warranties are not transferable. **IF ANY PART OF THE PRODUCT IS NOT IN COMPLIANCE WITH THIS LIMITED WARRANTY OR ANY IMPLIED WARRANTY, THE REMEDY OF REPAIR OR REPLACEMENT IS THE EXCLUSIVE REMEDY.** If any claim is made under this limited warranty or any implied warranty, Stamina reserves the right to require the product to be returned for inspection, at the purchaser’s expense, to Stamina’s premises in Springfield, Missouri. Return of the enclosed warranty registration card is not required for warranty coverage, but is merely a way of establishing the date and place of purchase.

Stamina **SHALL NOT BE LIABLE FOR THE LOSS OF USE OF ANY PRODUCT, LOSS OF TIME, INCONVENIENCE, COMMERCIAL LOSS OR ANY OTHER INDIRECT, CONSEQUENTIAL, SPECIAL OR INCIDENTAL DAMAGES DUE TO BREACH OF THE ABOVE WARRANTY OR ANY IMPLIED WARRANTY.**

THIS LIMITED WARRANTY IS THE ONLY EXPRESS WARRANTY. NO ORAL OR WRITTEN INFORMATION GIVEN BY STAMINA, ITS AGENTS OR EMPLOYEES, SHALL CREATE A WARRANTY OR IN ANY WAY INCREASE THE SCOPE OF THIS WARRANTY. This warranty gives you specific legal rights, and you may also have other legal rights which vary from state to state. **ANY OTHER RIGHT WHICH YOU MAY HAVE, INCLUDING ANY IMPLIED WARRANTY OF MERCHANTABILITY OR FITNESS FOR A PARTICULAR PURPOSE, IS LIMITED IN DURATION TO THE DURATION OF THIS WARRANTY.**

The laws in some states affect the disclaimer or limitation of implied warranties and consequential and incidental damages. If any such law is found applicable, the foregoing disclaimers and limitations of and on implied warranties and consequential and incidental damages shall be deemed to be modified to the extent necessary to comply with applicable law.

PRODUCT PARTS DRAWING

FRONT

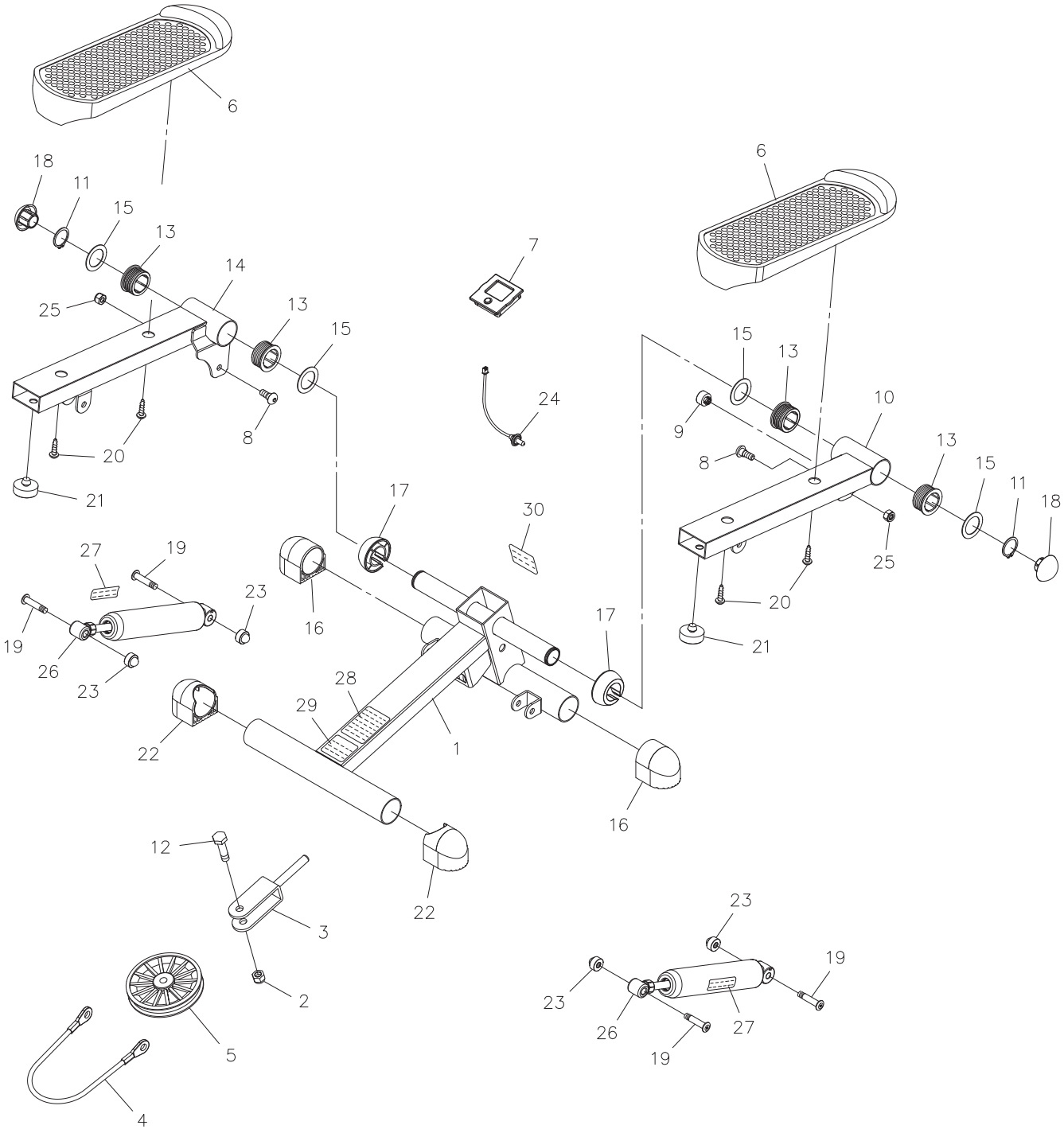

BACK

PARTS LIST

PART#	PART NAME	QTY
1	Main Frame	1
2	Nylock Nut (M10 x 1.5)	1
3	Pulley Bracket	1
4	Cable	1
5	Pulley (ø102mm)	1
6	Pedal Cap	2
7	Monitor	1
8	Shoulder Bolt, Button Head (M8 x 1.25 x 18mm)	2
9	Magnet	1
10	Right Pedal Arm	1
11	C Ring (25mm)	2
12	Bolt, Hex Head (M10 x 1.5 x 38mm)	1
13	Pedal Arm Bushing	4
14	Left Pedal Arm	1
15	Large Washer (25mm)	4
16	Front Endcap (38.1mm)	2
17	Spacer	2
18	Dome Cap	2
19	Bolt, Button Head (M8 x 1.25 x 36mm)	4
20	Screw, Round Head (ST5.5 x 25mm)	4
21	Bumper	2
22	Rear Endcap (38.1mm)	2
23	Fast Cap Nut (M6)	4
24	Sensor Wire	1
25	Nylock Nut (M8 x 1.25)	2
26	Shock	2
27	Shock Caution	2
28	Caution Label	1
29	Serial Decal	1
30	Pinch Point Decal	1
31	Manual	1

NOTES

NOTES

TO CONTACT CUSTOMER CARE

For your convenience, Stamina's customer care representatives can be reached by email at **customer.care@staminaproducts.com** or by phone at 1-800-375-7520 (in the U.S.). Our customer care representatives are available Monday through Thursday from 7:30 a.m. until 5:00 p.m., and Friday 8:00 a.m. until 3 p.m. Central Time.



ONLINE
CUSTOMER CARE
customer.care@staminaproducts.com
www.staminaproducts.com



TELEPHONE
CUSTOMER CARE
Tel: 1 (800) 375-7520



FAX
CUSTOMER CARE
Fax: (417) 889-8064



MAIL
STAMINA PRODUCTS, INC.
ATTN: Customer Care
2040 N Alliance Ave, Springfield, MO 65803

Would you like to recieve email information or special offers from Stamina Products? Register at contact.staminaproducts.com

TO REGISTER YOUR PRODUCT

To enact your warranty, please register your product by going to register.staminaproducts.com. Please have your product model number (printed on the cover of this owner's manual) and the serial number (printed on the black and white sticker on your product) ready.

If you don't have internet access, you can call customer care at 1-800-375-7520, or fill out and mail the product registration form below to Stamina Products, Inc.; 2040 N Alliance Ave, Springfield, MO 65803.

PRODUCT REGISTRATION FORM

Stamina Products, Inc.
2040 N Alliance Ave, Springfield, MO 65803

Model Number: ..... Serial Number: .....

Product Name: .....

Place Purchased: .....

Date of Purchase: ..... Purchase Price: .....

First Name: ..... Last Name: .....

City: ..... State: ..... Zip Code: .....

Email Address: ..... Phone #: ( ) .....

Would you like to receive email information or special offers from Stamina Products?* ____Yes ____No *If yes, be sure your email address is included above.

Detach and Mail or Fax the Form Above

TO ORDER PARTS

If there are missing or damaged parts, you can go to parts.staminaproducts.com and order those parts. If you have questions, please contact customer care. Do not return the product. To order parts by mail, fill out the sheet below and fax it to 417-889-8064. The part will be mailed to your address.

Detach and Mail or Fax the Form Below

PARTS ORDER FORM

Stamina Products, Inc.
2040 N Alliance Ave, Springfield, MO 65803

Mr./Ms: .....

Address: ..... Apt. #:.....

City: ..... State: ..... Zip Code: .....

IMPORTANT : We require your phone number to process the order!

Phone #: ( ) ..... Work Phone #: ( ) .....

Date of Purchase: .....

Model #: .....

Purchased From: .....

IMPORTANT: Before filling out the portion below, make sure you have the correct information.
Refer to the parts list to make sure you're ordering the right parts!

PART #	DESCRIPTION	QUANTITY
EXAMPLE: 1	Rear Unit Assembly	1